SAC-17 VA

› Intel® 7th Gen. Core™ i5-7300U / Pentium® 4415U Processor Fanless and All-around IP66 / IP69K Stainless 17" Panel PC

Features

- Intel® 7th Gen. Core™ i5-7300U / Pentium® 4415U processor on board
- Fanless and quiet design
- Stainless steel SUS304 / SUS316
- All-around IP66 / IP69K mechanical design
- M12 waterproof connectors
- Supports 5-wire resistive touchscreen or projected capacitive touchscreen

Specifications

System

CPU Type	Intel® 7th Gen. Core™ i5-7300U processor Intel® Pentium® 4415U processor
Chipset	Intel® SoC
Memory Support	1 x DDR4 2133MHz SO-DIMM socket (up to 16G) (non-ECC)
Enclosure	Stainless SUS304/SUS316
IP Rating	IP66/IP69K
Power Input	DC In 12V/24V
Watchdog	1~255 second watchdog timer selectable
Operating System	Windows 10 IoT LTSC 2019 / Ubuntu 16.04
Dimensions	450 x 381 x 70 mm (W x H x D)
System Weight	8.5 kg
Mounting Support	Wall mount / VESA 100 / Stand / Table
Certifications	FCC / CE

Display

LCD	17" TFT LCD (LED) resolution 1280 x 1024
Touchscreen	5-wire resistive touchscreen or projected capacitive touchscreen (USB interface)

Applications

- Automation
- Food Service
- Information

I/O Ports

Power Input	1 x M12 waterproof connector, supporting 12V/24V DC
USB	2 x USB 2.0 with M12 waterproof connector
Serial Port	1 x COM port with M12 waterproof connector COM 1 for RS-232/422/485
LAN	2 x GbE LANs with M12 waterproof connector Supports Wake-On-LAN
Storage	1 x 2.5" SATA III HDD or SSD
Expansion Slot	1 x full-sized Mini PCIe slot (Mini PCIe and USB signal)

Environment

Operating Temp. (Ambient with airflow)	HDD: 0°C~40°C (32°F~104°F) SSD: 0°C~50°C (32°F~122°F)
Storage Temp.	-20°C~80°C (-4°F~176°F)
Humidity	20%~90%

MASS GMBH · Josef-Bautz-Strasse. 15 · D-63457 Hanau ■ Internet: www.mass.de ■ e-mail: info@mass.de ■ USt.-IDNr. DE 113 864 107 · St.-Nr.: 044.239.20744
Telefon: +49(0)6181 / 90688-0 ■ Fax: +49 (0) 6181 / 90688-20 ■ Geschäftsführer: Werner Jens Dabberdt, René Kühn ■ Handelsregister B 7432 Amtsgericht Hanau

Highlights

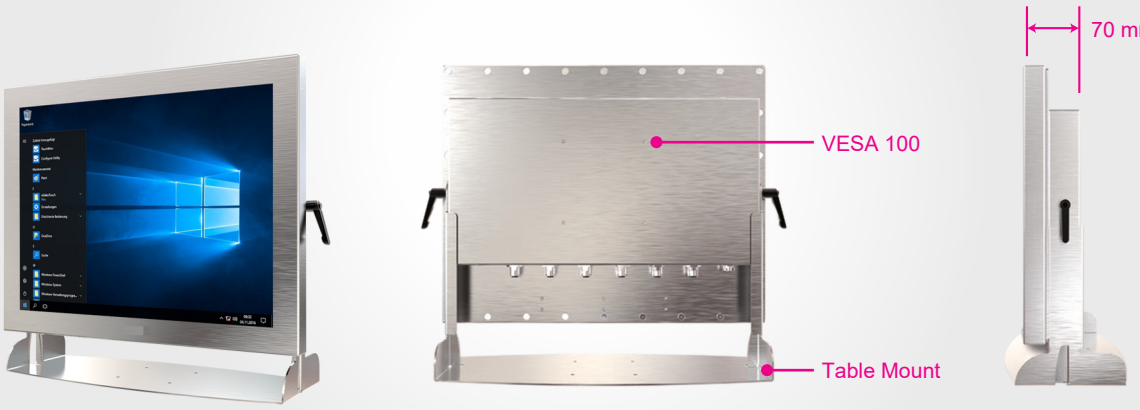

I/O Panel View

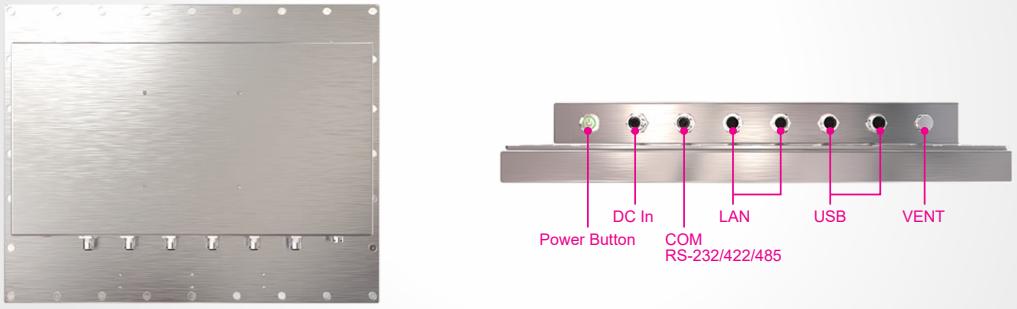

Dimensions

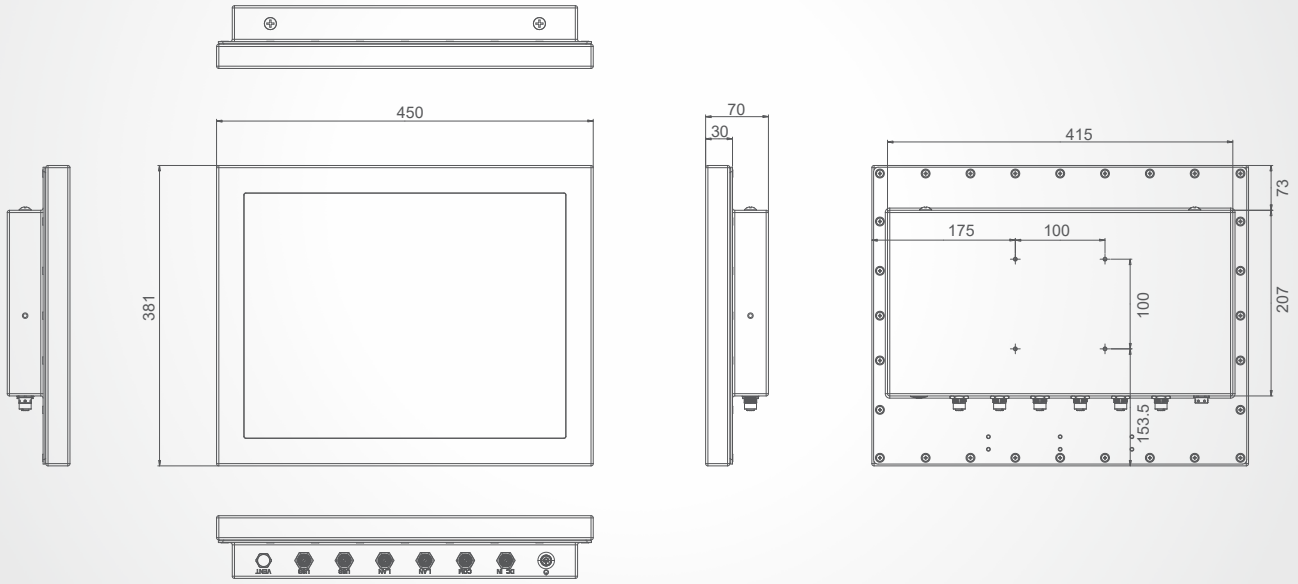

unit: mm