ECC04

❯ Intel® 8th Gen. Core™ i7 / i5 / i3 / Celeron® Processor
Compact and Fanless Embedded PC

Features

- Intel® 8th Gen. Core™ i7 / i5 / i3 and Celeron mobile processor
- Storage and Main Board easy maintenance design
- Three independent displays (1 x HDMI + 2 x HDMI/DP up to 4K)
- Multiple I/O board
  (LAN / USB / COM / CANBus / LPT) (Optional)
- PoE function (Support PD / PSE) (Optional)
- Expansion slot (full-sized Mini PCIe / SD slot / M.2)
- Support 4 x antenna holes
- Support power remote switch
- Wide-ranged voltage DC In (9~36V)
- Wide-ranged temperature (Optional)
- TPM module (Optional)

Specifications

System

CPU Support	Intel® Core™ i7-8665UE (4C) 1.70GHz Intel® Core™ i5-8365UE (4C) 1.60GHz Intel® Core™ i3-8145UE (2C) 2.2GHz Intel® Celeron® 4305UE (2C) 2.0GHz
Memory Support	2 x DDR4 2400 SO-DIMM socket (memory up to 32GB)
API	Watchdog / HW monitor / Digit I/O / I²C
Watchdog Timer	1~255 seconds
Drive Bay	1 x 2.5" SATAIII HDD or SSD drive space 1 x M.2 PCIe or SATAIII drive space
Power Input	Terminal block 9~36V (for PSE SKU) PoE LAN 54V (for PD SKU)
Operating System	Windows® 10 IoT Enterprise LTSC 2019 64bit Ubuntu18.04 LTS
Expansion Slots	1 x full-sized Mini PCIe (PCIe+USB 2.0) 1 x M.2 slot (2242-D2-E), PCIe/USB2.0 support (USB 2.0 only for Core™ i) 1 x M.2 slot (2242-D2-B), PCIe/SATA support 1 x SD slot (SD/SDHC/SDXC) 2 x I/O expansion slot TPM 2.0 (FW/HW) (optional)
Mounting	Wall mount DIN-Rail
System Weight	3 kg
Dimensions	228.00 x 71.27 x 212.09 mm (W x H x D)
Certifications	CE / FCC

I/O Ports

USB	4 x USB 3.1 (Gen2)
Display	1 x 4K HDMI limitation: no sound signal, no hot plug) 2 x 4K HDMI/DP (selectable under BIOS)
Serial Ports	2 x COM 1/2 for RS-232/422/485 (selectable under BIOS) [COM 1/2 for +5V/+12V/RI selectable by jumper] #1
LAN	2 x RJ45 connector with PSE/PD, support Wake-On-LAN/PXE # PSE: Output IEEE 802.3 AT 54V/25.5W (each port) (optional) # PD: Input IEEE 802.3 AT 54V/25.5W (each port) (optional)
LED	1 x Power On indicator (yellow) 1 x HDD LED indicator (green) 1 x negative temperature indicator (red) 2 x PoE power indicators (red)
Antenna Holes	4 x antenna holes
Drive Bay #2	1 x 2.5" SATAIII HDD or SSD drive space 1 x M.2 PCIe or SATAIII drive space
Digital I/O	8 in / 8 out (optional) #1
I²C	1 x 4 pin terminal block (optional) #1
DC Out	1 x 3 pin terminal block (DC 5V/12V/GND) (optional) #1
Power Remote Switch	1 x 2 pin terminal block (optional)
Audio	1 x Line Out / 1 x Mic In / 1 x Line In
Ground	1 x M3 hole

System Front View & Rear View

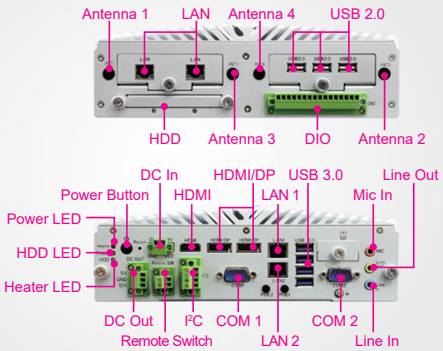

Optional I/O Expansion Ports

LAN	2 x RJ45 connector, support Wake-On-LAN/PXE
COM	2 x COM port for RS-232/422/485 (selectable under BIOS)
USB	3 x USB 2.0
Parallel Port	2 x DSUB 26 pin connector
CANBus	2 x DSUB 9 pin connector

Environment

Operating Temp. (Ambient with airflow)	Non-wide-ranged temperature HDD/SSD: HDD: 0°C~40°C (32°F~113°F) SSD: 0°C~50°C (32°F~122°F) With wide-ranged temperature SSD: 0°C~60°C (32°F~140°F) @humidity 20~95% (w/o heater, w/ PoE) 0°C~70°C (32°F~158°F) @humidity 20~95% (w/o heater, PoE) -40°C~60°C (-40°F~140°F) @humidity 20~95% (w/ heater, PoE) (optional) -40°C~70°C (-40°F~158°F) @humidity 20~95% (w/ heater, w/o PoE) (optional)
Storage Temp.	-40°C~85°C (-40°F~185°F)
Humidity	Operating humidity: 20%~90% Storage humidity: 20%~95%

Applications

- Automation
- Retail
- Banking
- Information
- Medical

MASS GMBH · Josef-Bautz-Strasse. 15 · D-63457 Hanau ■ Internet: www.mass.de ■ e-mail: info@mass.de ■ USt.-IDNr. DE 113 864 107 · St.-Nr.: 044.239.20744
Telefon: +49(0)6181 / 90688-0 ■ Fax: +49 (0) 6181 / 90688-20 ■ Geschäftsführer: Werner Jens Dabberdt, René Kühn ■ Handelsregister B 7432 Amtsgericht Hanau